lociPARSE: a locality-aware invariant point attention model for scoring RNA 3D structures

Sumit Tarafder and Debswapna Bhattacharya

Department of Computer Science, Virginia Tech, USA

Background

- Knowledge-based statistical potentials and deep-learning for RNA quality estimation
- Deep-learning based methods rely on superposition-dependent RMSD
- Scoring should be invariant to relative motion among structural motifs

Novelty

- First method targeting lDDT as ground truth
- Locality-aware invariant point attention based on atomic coordinates
- First deep learning method to estimate RNA local and global quality in a superposition free way

Workflow

1. Extract features from any input RNA 3D structure
2. Generate per nucleotide frame from P, C4′ and N coordinates
3. Aggregate features based on K-nearest neighbors
4. Compute invariant point attention operating on frames
5. Predict quality score (0-1]
   - pMoL = predicted molecular-level lDDT
   - pNuL = predicted nucleotide-wise lDDT

Source

GitHub https://github.com/Bhattacharya-Lab/lociPARSE

Overview

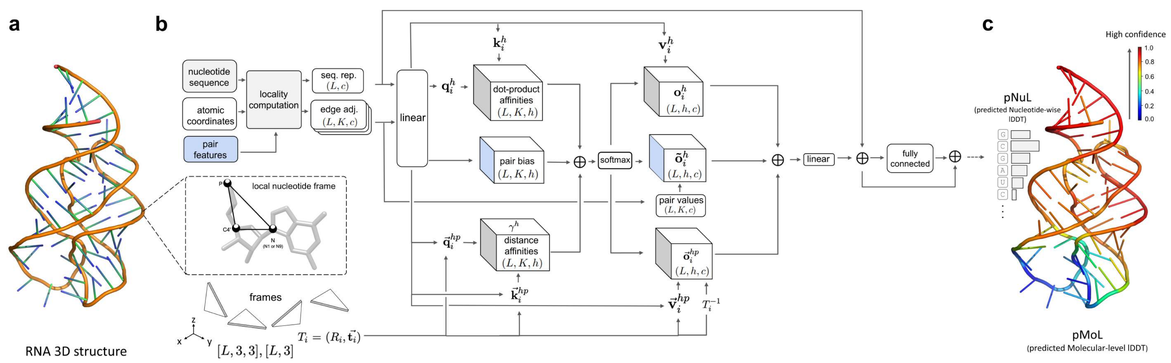

Performance on independent test set

Table 1. Performance on 30 independent RNA targets in terms of lDDT as ground truth, sorted in decreasing order of global Pearson's r. Best values are highlighted in bold.

Method	Global					Per-target average			
	r ↑	ρ ↑	τ ↑	Diff ↓	ROC ↑	r ↑	ρ ↑	τ ↑	Loss ↓
lociPARSE	**0.67**	**0.71**	**0.55**	**0.06**	**0.91**	**0.77**	**0.75**	**0.64**	0.06
rsRNASP	0.5	0.5	0.36	0.11	0.79	0.75	0.69	0.55	0.06
RASP	0.46	0.5	0.36	0.16	0.78	0.72	0.68	0.58	0.08
ARES	0.43	0.48	0.34	0.55	0.8	0.72	0.7	0.58	0.06
DFIRE-RNA	0.33	0.32	0.22	0.19	0.69	0.75	0.7	0.56	**0.05**
cgRNASP	0.27	0.19	0.13	0.15	0.60	0.12	0.07	0.07	0.07
RNA3DCNN	0.19	0.17	0.12	0.64	0.58	0.47	0.36	0.27	0.06

Performance on CASP15

Table 2. Performance on CASP15 RNA targets in terms of lDDT as ground truth, sorted in decreasing order of global Pearson's r. Best values are highlighted in bold.

Method	Global					Per-target average			
	r ↑	ρ ↑	τ ↑	Diff ↓	ROC ↑	r ↑	ρ ↑	τ ↑	Loss ↓
lociPARSE	**0.74**	**0.72**	**0.55**	0.12	**0.96**	**0.73**	**0.66**	**0.52**	**0.07**
ARES	0.33	0.35	0.25	0.27	0.78	0.55	0.53	0.42	0.13
RASP	0.33	0.42	0.3	0.17	0.80	0.55	0.54	0.42	0.17
rsRNASP	0.31	0.41	0.3	**0.11**	0.83	0.66	0.61	0.47	0.11
DFIRE-RNA	0.29	0.3	0.22	0.39	0.77	0.69	0.6	0.46	0.16
cgRNASP	0.29	0.32	0.24	0.12	0.80	0.59	0.5	0.37	0.11
RNA3DCNN	0	-0.01	-0.01	0.52	0.35	0.5	0.42	0.31	0.09

Case study

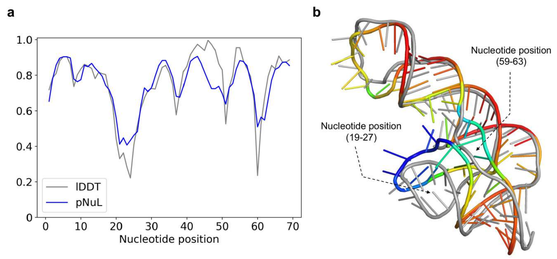

Per nucleotide prediction accuracy on 7QR3

Local quality prediction

Table 3. Local nucleotide-wise scoring performance on CASP15 set. Best values are highlighted in bold.

Method	Local nucleotide-wise			
	r ↑	ρ ↑	τ ↑	Diff ↓
lociPARSE	**0.72**	**0.73**	**0.53**	**0.15**
RNA3DCNN	0.17	0.19	0.13	0.24

Ranking ability

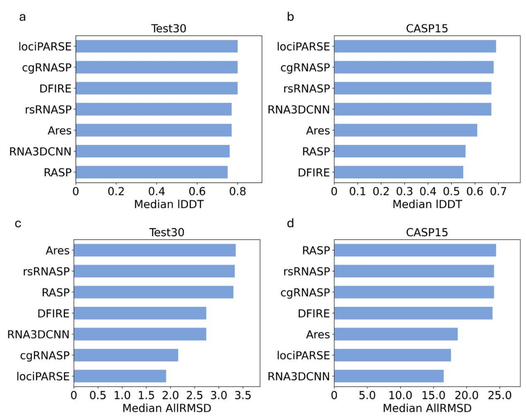

Median scores of top ranked structure

Conclusion

- Can be extended for RMSD or INF
- Multi-reference lDDT for enhanced expressivity